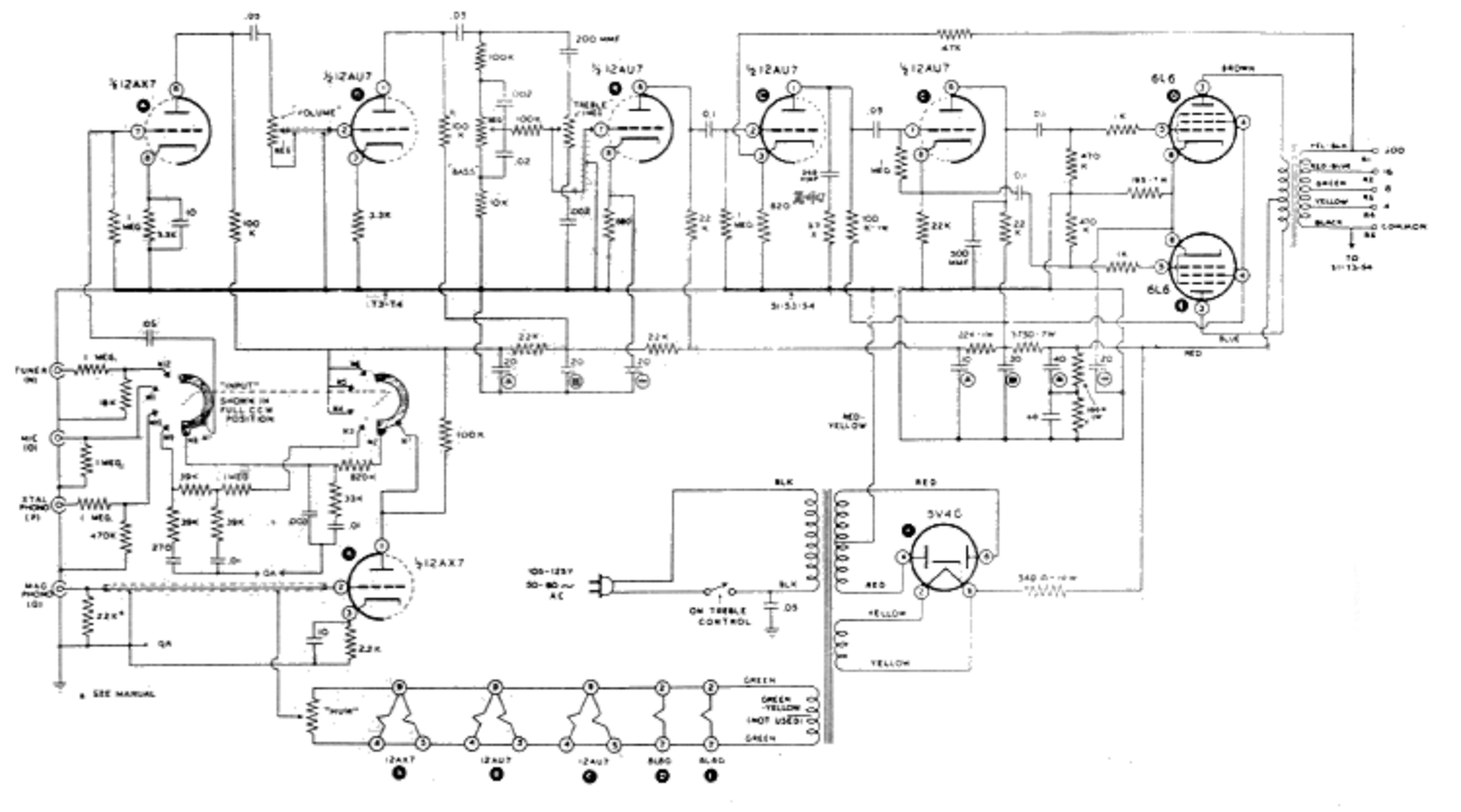
½12AX7
½12AU7
½12AU7
½12AU7
½12AU7
6L6
6L6
5V4G
"VOLUME"
"BASS"
"TREBLE"
"INPUT" SHOWN IN FULL CCW POSITION
"HUM"
TUNER (N)
MIC (O)
XTAL PHONO (P)
MAG PHONO (Q)
ON TREBLE CONTROL
105-125V 50-60 cy AC
TO 31-13-54
31-13-54
31-53-54
SEE MANUAL
GREEN-YELLOW (NOT USED)
12AX7
12AU7
12AU7
6L6
6L6